BEL 2005 => ...

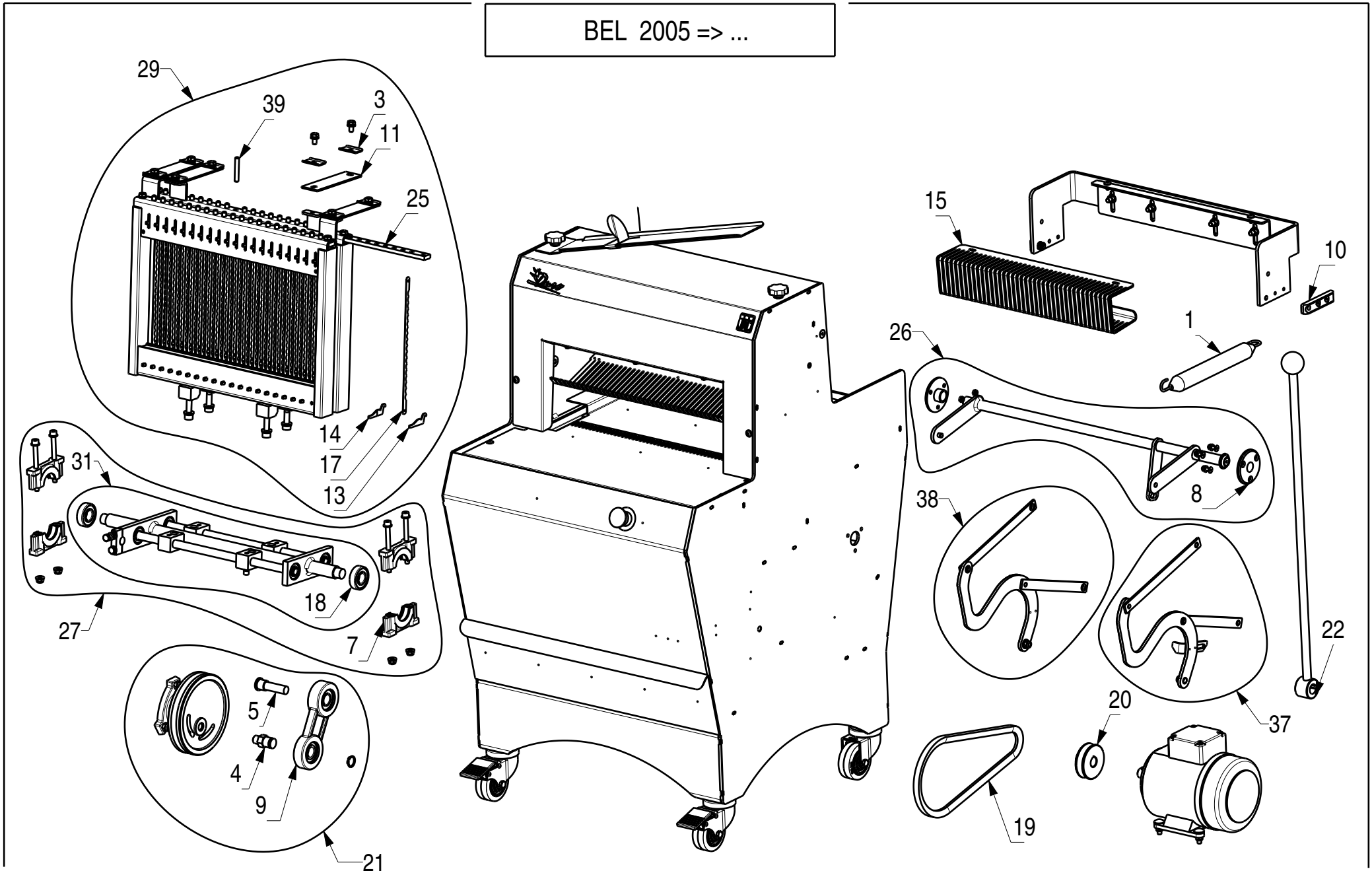

BEL 2005 => ...

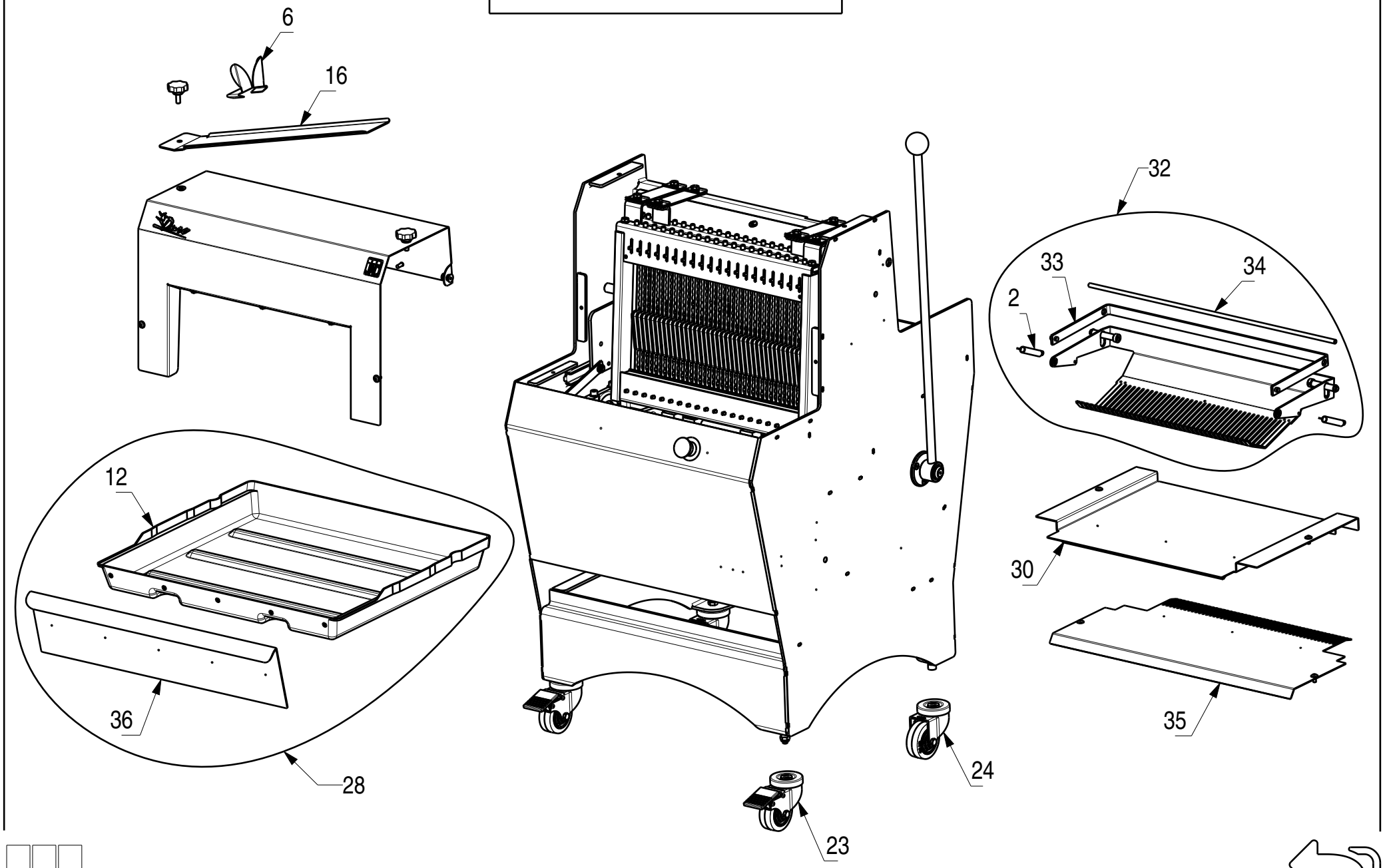

JAC Traditionally Innovative

BEL 2005 => ...

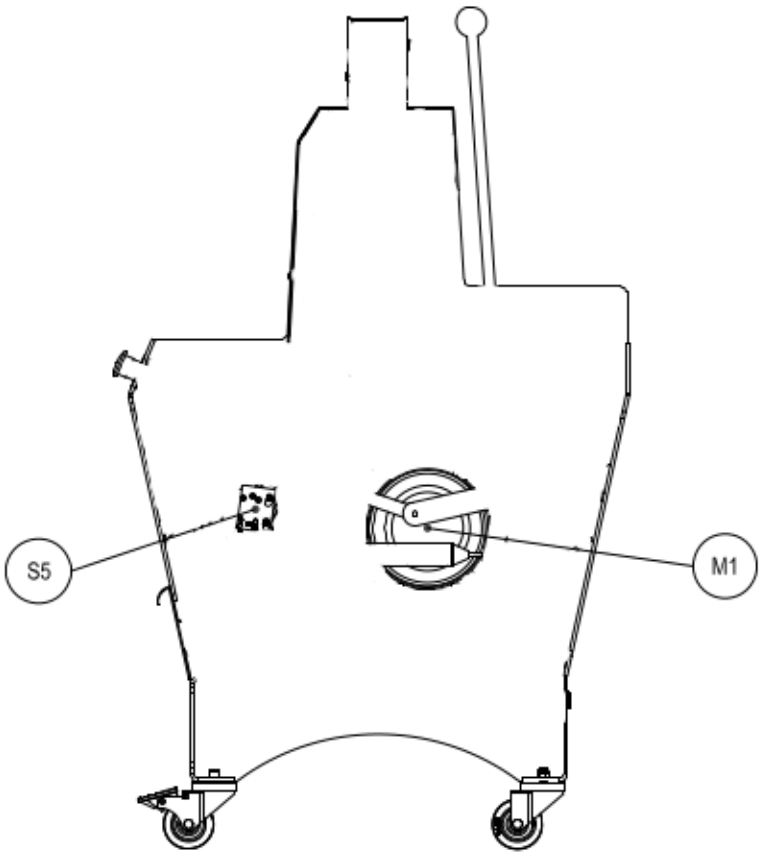

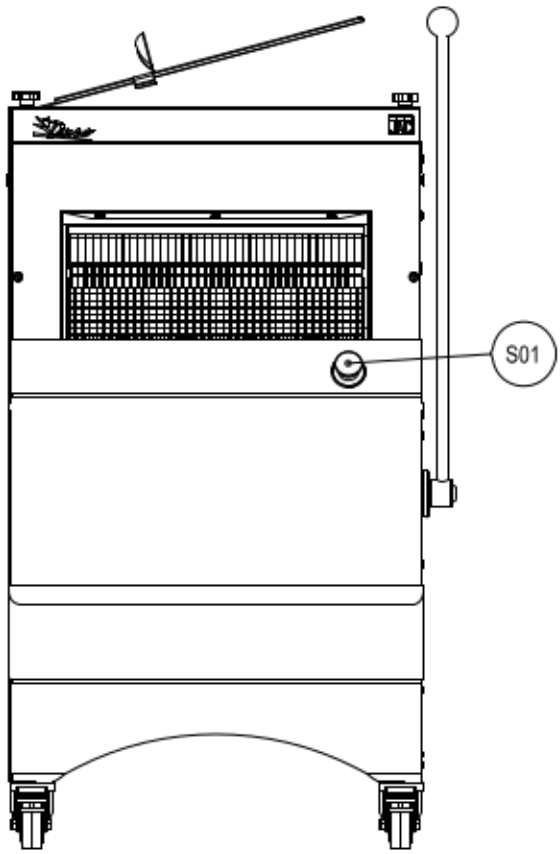

BEL 2005 => …

REP	QTE	N°	
1	1	5310002	
2	2	5310019	
3	8	P40257	
4	1	5540018	
5	1	5540019	
6	1	5590011	
7	4	5610003	
8	2	5610004	
9	1	5610005	
10	2	5690010	
11	4	P40280	
12	2	5690187	
13	116	5740067	
14	116	5740068	
15	1	3-01406-600	50 mm
15	1	3-00950-600	80 mm
15	1	3-00951-600	100 mm
16	1	4-02041-600	
17	100	6110001	13 mm 0,5
17	100	6110019	13 mm 0,7
18	2	7210011	
19	1	7240032	A31 (1~)
19	1	7240018	A32 (3~)
20	1	7260011	
21	1	7320001	
22	1	7380100	
23	2	7930036	
24	2	7930037	
25	2	3-00817-600	
26	1	3-01009-600	
27	1	3-01208-600	
28	1	3-01501	
29	1	3-01441-600	
30	1	4-01979-600	
31	1	4-02552-600	
32	1	4-02769-600	
33	1	4-02770-600	
34	1	4-02771-600	
35	1	4-03090-600	
36	1	4-03813	
37	1	4-04511	
38	1	4-04512	
39	58	VO91301	

REP	QTE	N°	
M1	1	6620038	1~ 230V
M1	1	6620037	3~ 230/400V
S01	1	6310079	
S5	1	6340003	